DEPARTMENT OF ELECTRONICS & COMMUNICATION ENGINEERING

www.rvce.edu.in; hod.ec@rvce.edu.in; (O) 080 - 6818 8178

Tutorial 1A: Mesh analysis and Node Analysis

Sl. No.	Problems
1	For the electrical network shown in Fig, determine the loop currents and all branch currents. 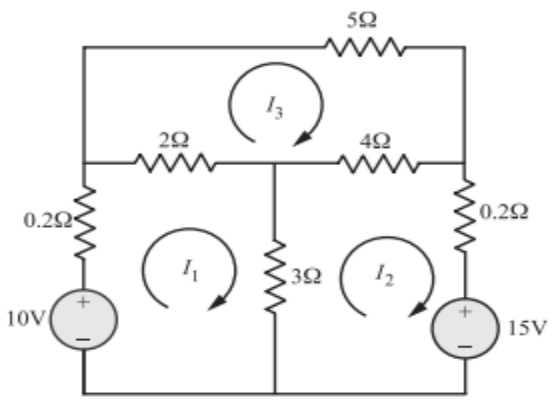
2	For the network shown in Fig. find the mesh currents. 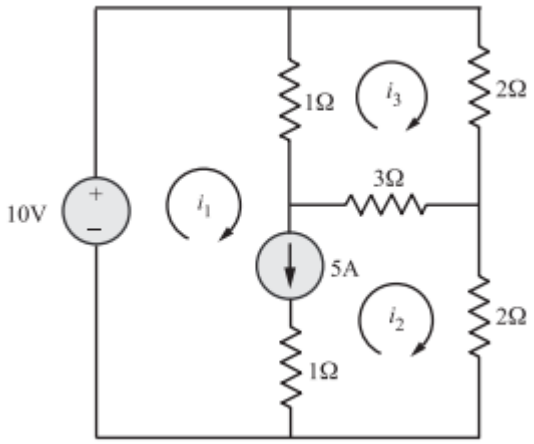
3	Use the node-voltage method to find the power developed by the 20 V source in the circuit shown in Fig.

	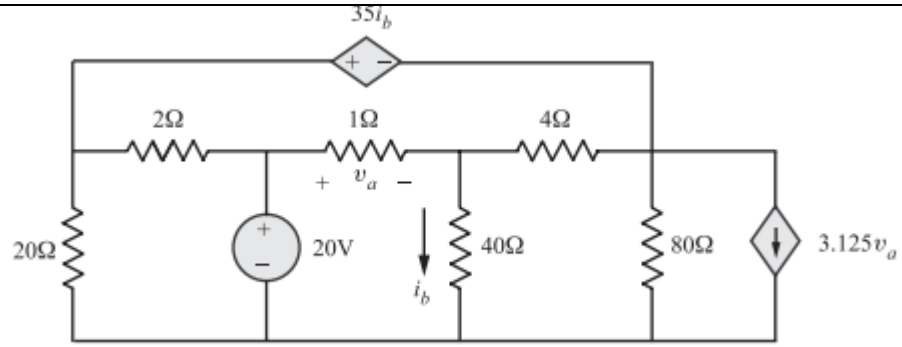
4	Refer the network shown in Fig.. Find the node voltages Vd and Vc. 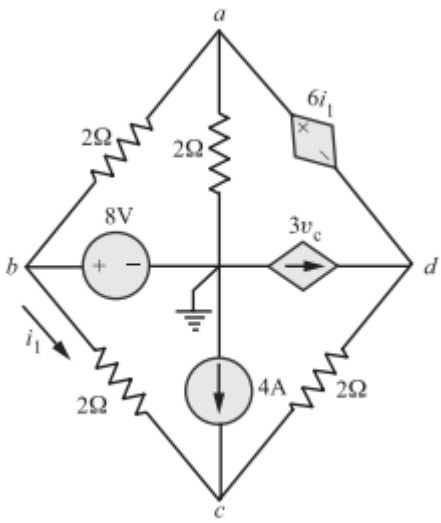
5	Use nodal analysis to find Vo in the circuit shown in Fig. 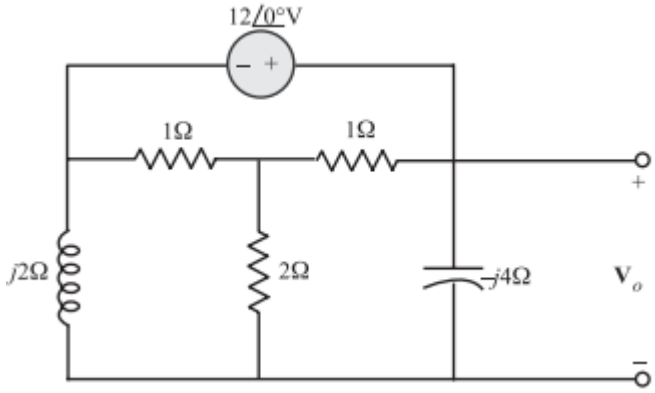
6	Find i1 in the circuit of Fig. using nodal analysis.

	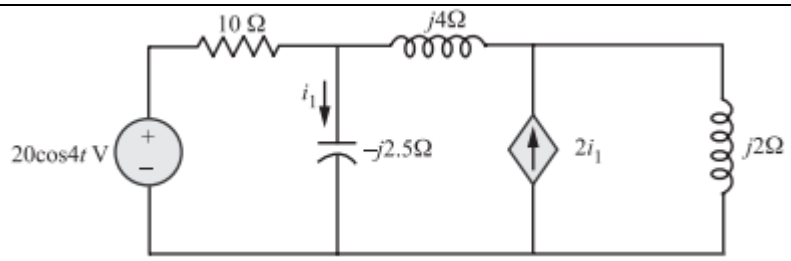
7	Determine the current Io in the circuit of Fig. using mesh analysis 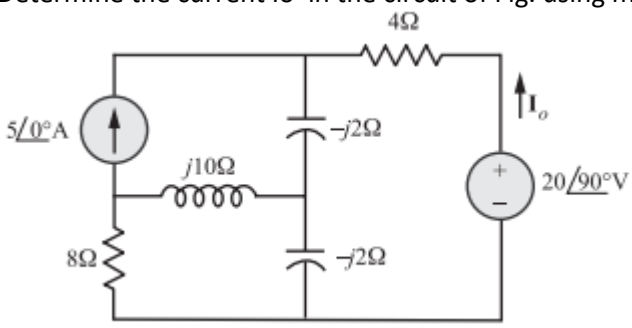
8	The current io = 4A. Find the power dissipated in the 70 Ω resistor 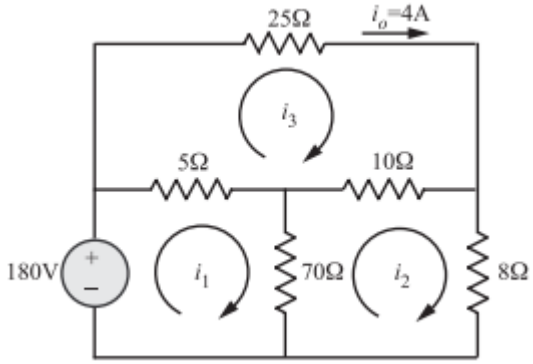
9	Refer the circuit shown in Fig.. Find I using mesh analysis.

DEPARTMENT OF ELECTRONICS & COMMUNICATION ENGINEERING
www.rvce.edu.in; hod.ec@rvce.edu.in; (O) 080 - 6818 8178

	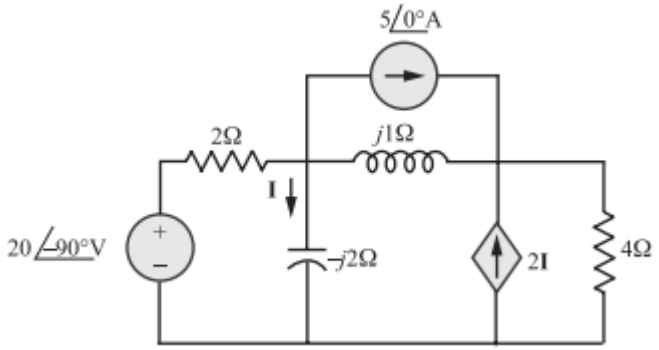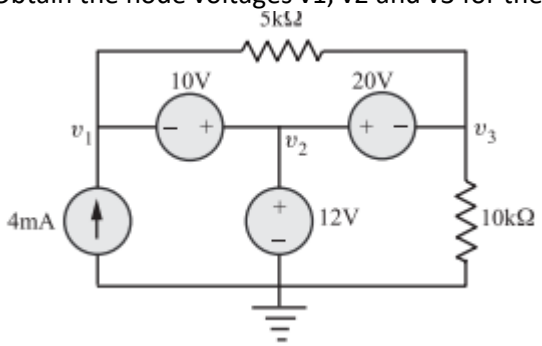
10	Obtain the node voltages v1, v2 and v3 for the following circuit